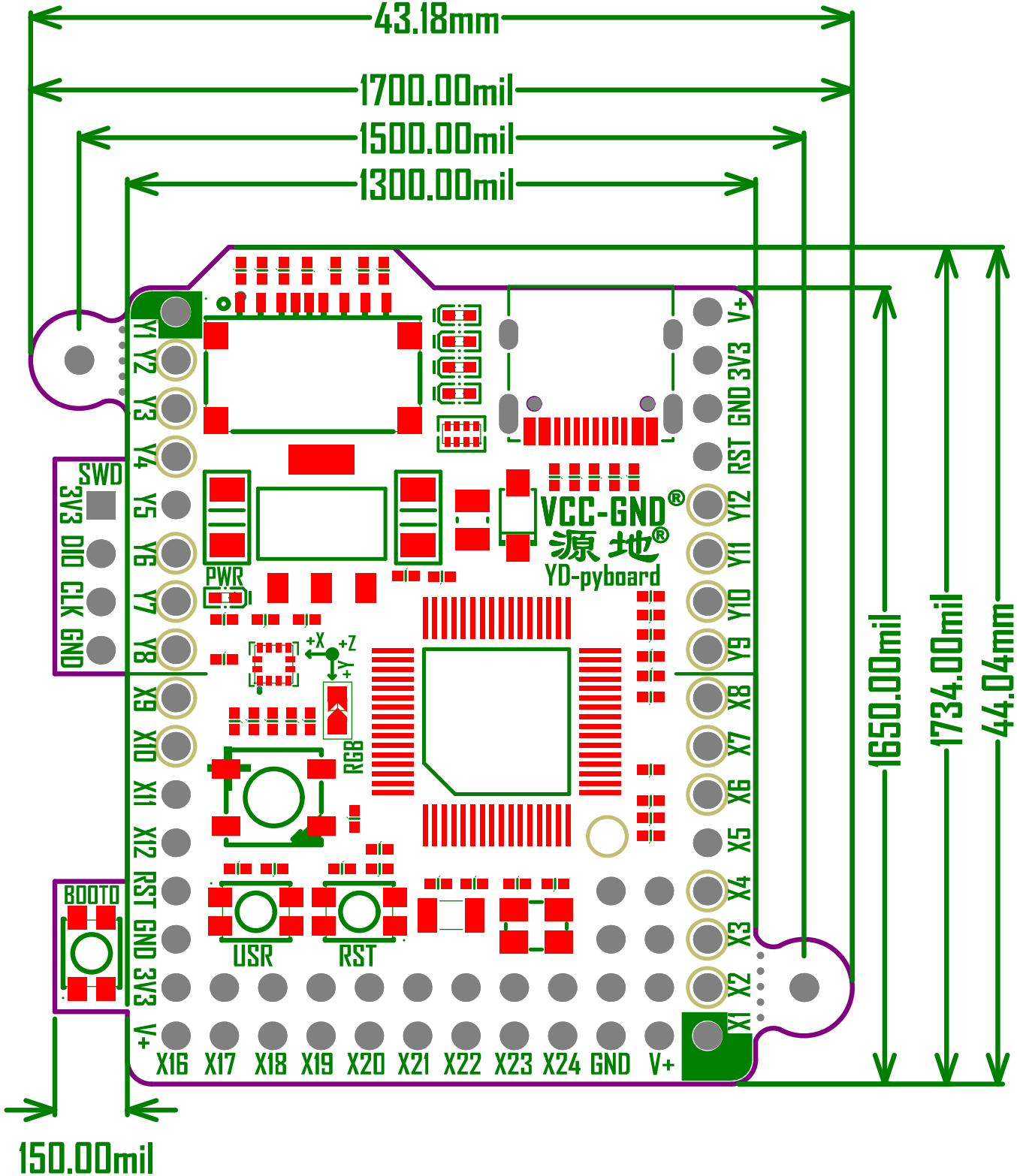
43.18mm
1700.00mil
1500.00mil
1300.00mil
1650.00mil
1734.00mil
44.04mm
150.00mil
SWD
3V3
DIO
CLK
GND
BOOT0
PWR
RGB
USR
RST
VCC-GND®
源地®
YD-pyboard
Y1 Y2 Y3 Y4 Y5 Y6 Y7 Y8 X9 X10 X11 X12 RST GND 3V3 V+
X16 X17 X18 X19 X20 X21 X22 X23 X24 GND V+
V+ 3V3 GND RST Y12 Y11 Y10 Y9 X8 X7 X6 X5 X4 X3 X2 X1